Summary in Graph

Exam Summary (GO Classes CS | Digital Logic | Boolean Algebra | Weekly Quiz 4)

Qs. Attempted:	15 (5 + 10)
Correct Attempts:	11 (5 + 6)
Incorrect Attempts:	4 (0 + 4)
Correct Marks:	17 (5 + 12)
Penalty Marks:	0.67 (0 + 0.67)
Resultant Marks:	16.33 (5 + 11.33)

Total Questions:	15 (5 + 10)
Total Marks:	25 (5 + 20)
Exam Duration:	45 Minutes
Time Taken:	22 Minutes

Individual Question Statistics

Select Metric: Marks Obtained

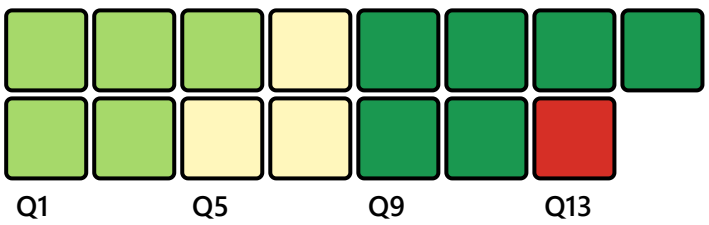

* Average Stats based on first-attempt stats of Top 10% (28) out of 276 users

EXAM RESPONSE EXAM STATS FEEDBACK

Technical

Q #1 Multiple Choice Type Award: 1 Penalty: 0.33 Digital Logic

Simplify the following expression:

$$(\overline{AB})(\mathrm{A}' + B)(\mathrm{B}' + B)$$

A. A'

B. B'

C. $A'B'$

D. $A' + B'$

Your Answer: A | Correct Answer: A | Correct | Time taken: 00min 45sec | Discuss

Q #2 | Multiple Choice Type | Award: 1 | Penalty: 0.33 | Digital Logic

The value of the Boolean expression (with usual definitions) $(A'BC')' + (AB'C)'$ is

A. 0

B. 1

C. A

D. BC

Your Answer: B | Correct Answer: B | Correct | Time taken: 00min 23sec | Discuss

Q #3 | Multiple Choice Type | Award: 1 | Penalty: 0.33 | Digital Logic

What is the minimum number of elementary Boolean operations (AND / OR / NOT) required to construct an equivalent Boolean expression of $AB + AB' + A'C$(X' denotes the complement of X) ?

A. 1

B. 3

C. 5

D. 7

Your Answer: A | Correct Answer: A | Correct | Time taken: 00min 23sec | Discuss

Q #4 | Multiple Choice Type | Award: 1 | Penalty: 0.33 | Digital Logic

Let a, b, c be members of a Boolean algebra B. Define $a \rightarrow b \stackrel{\text{def}}{=} \neg a \vee b$. Which of the following statements is correct?

A. $a \rightarrow (b \rightarrow c) = b \rightarrow (a \rightarrow c)$

B. $a \rightarrow (b \rightarrow c) = a \rightarrow (c \rightarrow b)$

C. $a \rightarrow (b \rightarrow c) = b \rightarrow (c \rightarrow a)$

D. $a \rightarrow (b \rightarrow c) = c \rightarrow (a \rightarrow b)$

Your Answer: A | Correct Answer: A | Correct | Time taken: 01min 03sec | Discuss

Q #5 Multiple Choice Type | Award: 1 | Penalty: 0.33 | Digital Logic

Applying DeMorgan's theorem to the expression $\overline{\overline{(X+Y)}+\bar{Z}}$, we get

A. $(X+Y)Z$

B. $(\mathrm{X}'+\mathrm{Y}')\mathrm{Z}'$

C. $(\mathrm{X}'+\mathrm{Y}')Z$

D. $(X+Y)\mathrm{Z}'$

Your Answer: A | Correct Answer: A | Correct | Time taken: 00min 21sec | Discuss

Q #6 Numerical Type | Award: 2 | Penalty: 0 | Digital Logic

Consider the Boolean function F($x1$, $x2$, . . . , $x10$) realised by the following combinational circuit.

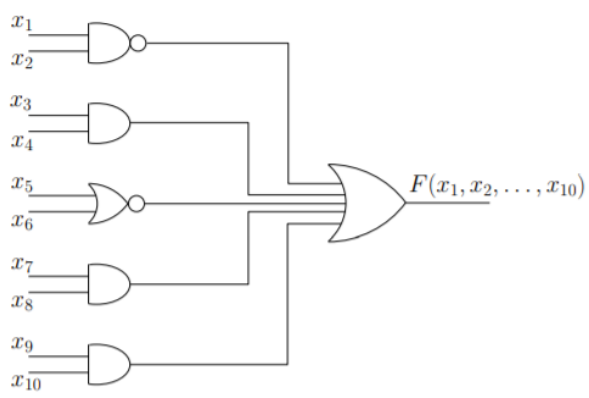

Figure for C5.(b)

Determine the number of input combinations for which the output function F realised by the circuit becomes **true** (logic 1).

Your Answer: 186 | Correct Answer: 943 | Incorrect | Time taken: 05min 36sec | Discuss

Q #7 Multiple Select Type | Award: 2 | Penalty: 0 | Digital Logic

The product of maxterms $f(x,y,z) = \Pi M(0,2,4,7)$ can be written as:

A. $f(x,y,z) = \sum m(1,3,5,6)$

B. $f(x,y,z) = \sum m(0,2,4,7)$

C. $f(x,y,z) = (\sum m(1,3,5,6))'$

D. $f(x,y,z) = M0 + M2 + M4 + M7$

Your Answer: A;C | Correct Answer: A | Incorrect | Time taken: 00min 51sec | Discuss

Q #8 Multiple Select Type | Award: 2 | Penalty: 0 | Digital Logic

Which of the following Boolean equations is in the form of product of maxterms of the function $\mathrm{F(A, B, C)}$?

A. $F = (A'BC)\,(ABC')\,(ABC)$

B. $F = (A' + B + C')\,(A' + C)\,(A + B' + C)$

C. $\mathrm{F = (A + B + C)\,(A' + B + C)\,(A + B' + C)}$

D. $F = AB'C + A'BC' + A'BC'$

Your Answer: B;C | Correct Answer: C | Incorrect | Time taken: 00min 46sec | Discuss

Q #9 | Multiple Choice Type | Award: 2 | Penalty: 0.67 | Digital Logic

The output F of the circuit equals logical:

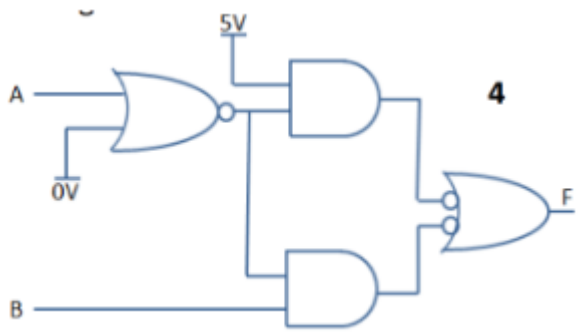

A. $\mathrm{A' + B'}$

B. $\mathrm{A'}$

C. $\mathrm{A' + B}$

D. $\mathrm{A + B'}$

Your Answer: D | Correct Answer: D | Correct | Time taken: 01min 03sec | Discuss

Q #10 | Multiple Choice Type | Award: 2 | Penalty: 0.67 | Digital Logic

The equivalent canonical (standard) form for the following logical expression $\mathbf{F = AB + C}$ is

A. $\mathrm{F = ABC + A'BC + AB'C + A'B'C}$

B. $\mathrm{F = ABC + AB'C + A'B'C + ABC'}$

C. $\mathrm{F = ABC + A'BC + AB'C + A'B'C + ABC'}$

D. None of the above

Your Answer: C | Correct Answer: C | Correct | Time taken: 01min 08sec | Discuss

Q #11 | Multiple Choice Type | Award: 2 | Penalty: 0.67 | Digital Logic

The function $\mathbf{F(A, B, C) = \sum(1, 2, 3, 5, 7)}$ is equivalent to

A. $C' + A'B$

B. $C + AB$

C. $C + A'B$

D. $C + AB'$

Your Answer: C | Correct Answer: C | Correct | Time taken: 02min 34sec | Discuss

Q #12 | Multiple Choice Type | Award: 2 | Penalty: 0.67 | Digital Logic

From the truth table below, determine the standard $\mathbf{SOP}$ expression.

Inputs			Output
A	B	C	X
0	0	0	0
0	0	1	1
0	1	0	0
0	1	1	1
1	0	0	0
1	0	1	0
1	1	0	1
1	1	1	0

A. $X = A'B'C' + ABC + AB'C$

B. $X = ABC + ABC + ABC$

C. $X = AB'C + A'BC + ABC'$

D. $X = A'B'C + A'BC + ABC'$

Your Answer: D | Correct Answer: D | Correct | Time taken: 00min 36sec | Discuss

Q #13 | Multiple Choice Type | Award: 2 | Penalty: 0.67 | Digital Logic

Consider the circuit from Figure below.

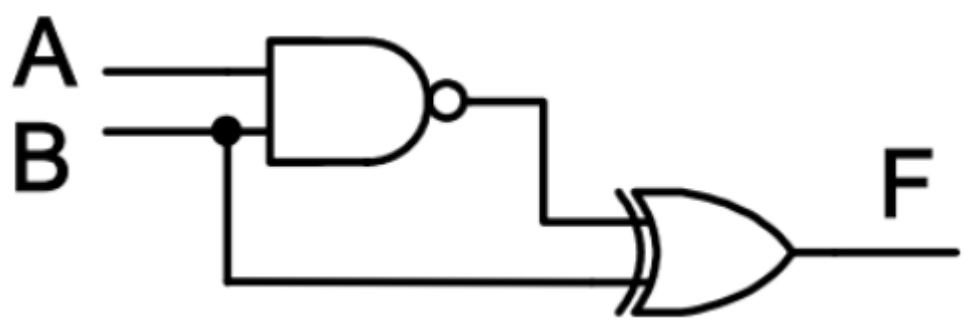

Function F is:

A. $F(A, B) = AB$

B. $F(A, B) = A'B'$

C. $F(A, B) = AB'$

D. none of the above

Your Answer: D | Correct Answer: D | Correct | Time taken: 02min 30sec | Discuss

Q #14 Multiple Choice Type | Award: 2 | Penalty: 0.67 | Digital Logic

The logic function $\mathrm{F}(\mathrm{A}, \mathrm{B})$ implemented by the circuit shown in Figure below is equivalent to the logic function of a:

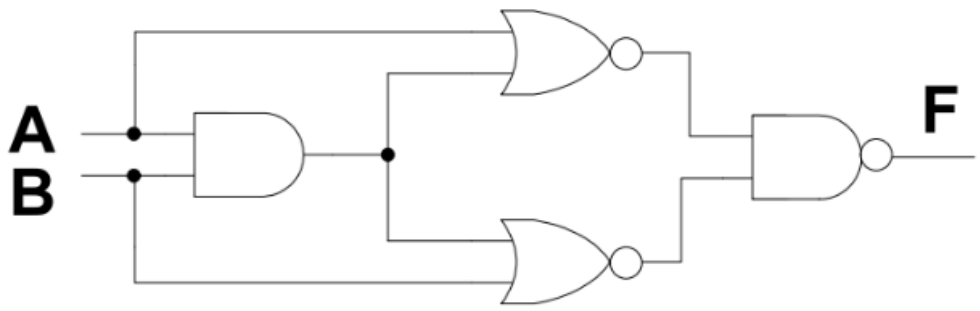

A. 2-input **AND** gate

B. 2-input **NAND** gate

C. 2-input **XOR** gate

D. none of the above

Your Answer: A | Correct Answer: D | Incorrect | Time taken: 00min 58sec | Discuss

Q #15 Multiple Choice Type | Award: 2 | Penalty: 0.67 | Digital Logic

The truth table for a Boolean expression is specified by the correspondence $(P, Q, R) \rightarrow S$ where $(0,0,0) \rightarrow 0, (0,0,1) \rightarrow 1, (0,1,0) \rightarrow 0, (0,1,1) \rightarrow 1, (1,0,0) \rightarrow 0, (1,0,1) \rightarrow 0, (1,1,0) \rightarrow 0, (1,1,1) \rightarrow 1$. A Boolean expression having this truth table is

A. $[(\sim P \wedge \sim Q) \vee Q] \vee R$

B. $[(\sim P \wedge \sim Q) \wedge Q] \wedge R$

C. $[(\sim P \wedge \sim Q) \vee \sim Q] \wedge R$

D. $[(\sim P \wedge \sim Q) \vee Q] \wedge R$

Your Answer: D | Correct Answer: D | Correct | Time taken: 02min 47sec | Discuss

You're doing good, you can target above 70 percentage!

Copyright & Stuff